Structure Table	
Storm #	Structure Details
1	STA.19+06,13'LT. T/G=744.29 ODOT CB-3A 12"(N)INV=743.12
2	STA.1+13,126'RT. T/G=743.90 ODOT CB-3A 12"(W)INV=742.42 12"(S)INV=742.42
3	STA.19+29,10'RT. T/G=743.22 STORM MANHOLE 12"(NW)INV=739.60 12"(E)INV=739.60
4	STA.3+04,13'RT. T/G=743.71 ODOT CB-3A 12"(SE)INV=740.00
5	STA.2+52,13'LT. T/G=743.35 ODOT CB-3 12"(NW)INV=739.50 12"(E)INV=739.50

Structure Table	
Storm #	Structure Details
6	STA.2+06,13'RT. T/G=743.66 ODOT CB-3A 12"(SE)INV=739.00 12"(W)INV=739.00
7	STA.1+23,21'RT. T/G=744.51 CONNECT TO EX.15" W/ STORM MANHOLE 12"(NW)INV=737.42 15"(SE)INV=737.42
8Ex	STA.6+90,0' T/G=743.60 ODOT CB2-2B 15"(NW)INV=736.58 15"(E)INV=736.58
9Ex	STA.8+25,1'RT. T/G=740.60 ODOT CB2-2B 15"(W)INV=735.29 15"(SE)INV=735.29
10	STA.13+60,13'LT. T/G=743.95 ODOT CB-3A 12"(W)INV=740.51

Structure Table	
Storm #	Structure Details
11	STA.13+66,13'RT. T/G=744.02 ODOT CB-3A 12"(N)INV=740.00 12"(E)INV=740.00
12	STA.10+68,13'LT. T/G=738.58 ODOT CB-3A 12"(NW)INV=734.58
13	STA.10+36,13'RT. T/G=738.37 ODOT CB-3 MODFIED 15"(NW)INV=733.00 12"(SE)INV=733.25 12"(S)INV=733.25 24"(N)INV=732.25
14	STA.8+10,12'RT. T/G=736.30 ODOT CB-3 24"(S)INV=731.50 24"(NE)INV=731.50
15	STA.8+10,150'RT. T/G=720.82 ODOT CB2-3 24"(SW)INV=718.53 24"(NW)INV=714.00

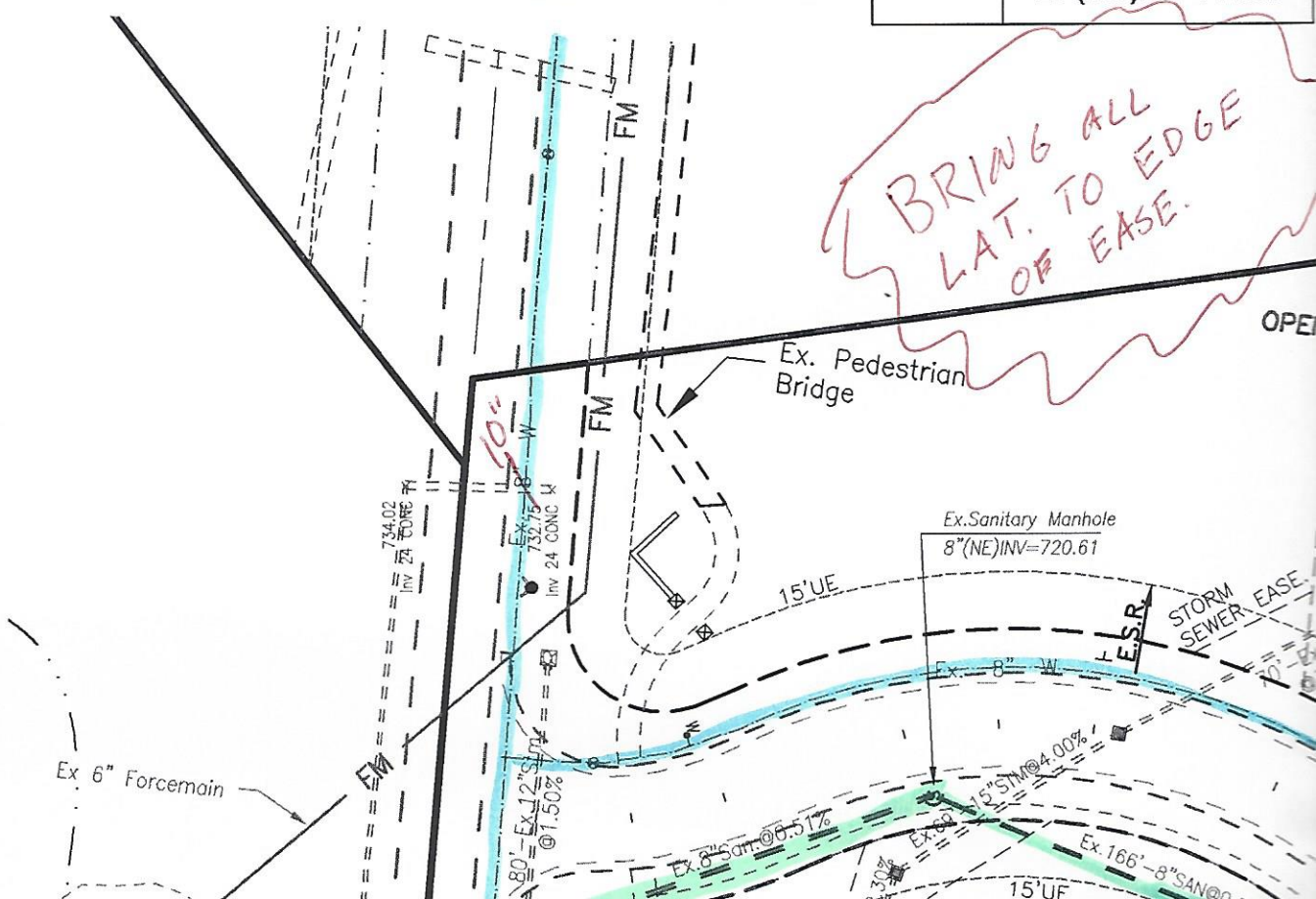

Structure Table	
#	Structure Details
	STA.8+21,178'RT. T/G=714.96 ODOT HW-1 24"(SE)INV=712.00
	STA.4+74,27'RT. T/G=739.48 ODOT CB-3 12"(E)INV=736.25
	STA.5+85,105'RT. T/G=725.39 ODOT CB2-2B 12"(W)INV=721.00 12"(E)INV=716.50
	STA.8+43,208'RT. T/G=715.83 ODOT HW-1 12"(W)INV=714.00

Structure Table	
Sanitary #	Structure Details
A	STA.17+12,18'RT. SANITARY MANHOLE T/Rim=748.20 8"(W)INV=732.80 8"(NE)INV=732.80 8"(SE)INV=734.79
B	STA.16+10,27'RT. SANITARY MANHOLE T/Rim=747.36 8"(SW)INV=733.51 8"(N)INV=733.51
C	STA.14+71,27'RT. SANITARY MANHOLE T/Rim=745.91 8"(S)INV=734.55
D	STA.17+02,88'LT. SANITARY MANHOLE T/Rim=749.17 8"(NW)INV=737.75
E	STA.10+75,18'RT. SANITARY MANHOLE T/Rim=739.07 8"(NW)INV=726.75 8"(S)INV=726.75
F	STA.13+78,27'RT. SANITARY MANHOLE T/Rim=744.86 8"(N)INV=733.25

Structure Table	
Sanitary #	Structure Details
G	STA.9+87,117'LT. SANITARY MANHOLE T/Rim=737.08 8"(SW)INV=727.02
H	STA.7+12,161'LT. SANITARY MANHOLE T/Rim=745.39 8"(SE)INV=725.24 8"(NW)INV=725.24
I	STA.7+07,230'LT. SANITARY MANHOLE T/Rim=743.50 8"(SE)INV=727.00 8"(W)INV=728.99 8"(NE)INV=727.00
J	STA.6+86,426'LT. SANITARY MANHOLE T/Rim=745.79 8"(E)INV=734.26
K	STA.7+80,323'LT. SANITARY MANHOLE T/Rim=740.51 8"(SW)INV=729.25

Structu	
Sanitary #	S
Ex1	S SAN 8" 8
Ex2	S SAN 8 8" 8"

WATERMA
JOINT PIPE

FREDERICK COURT
Sta.02+14.6' to Sta.3+98

FREDERICK TRAIL
Sta.02+69.3' to Sta.4+45

GRANTS FREDERICK
Sta.00+25.9' to Sta.11+2
Sta.15+95.1' to Sta.18+2

LOOP 1
Sta.07+00.0' to Sta.09+3

LOOP 2
Sta. 02+00.0' to Sta. 03+

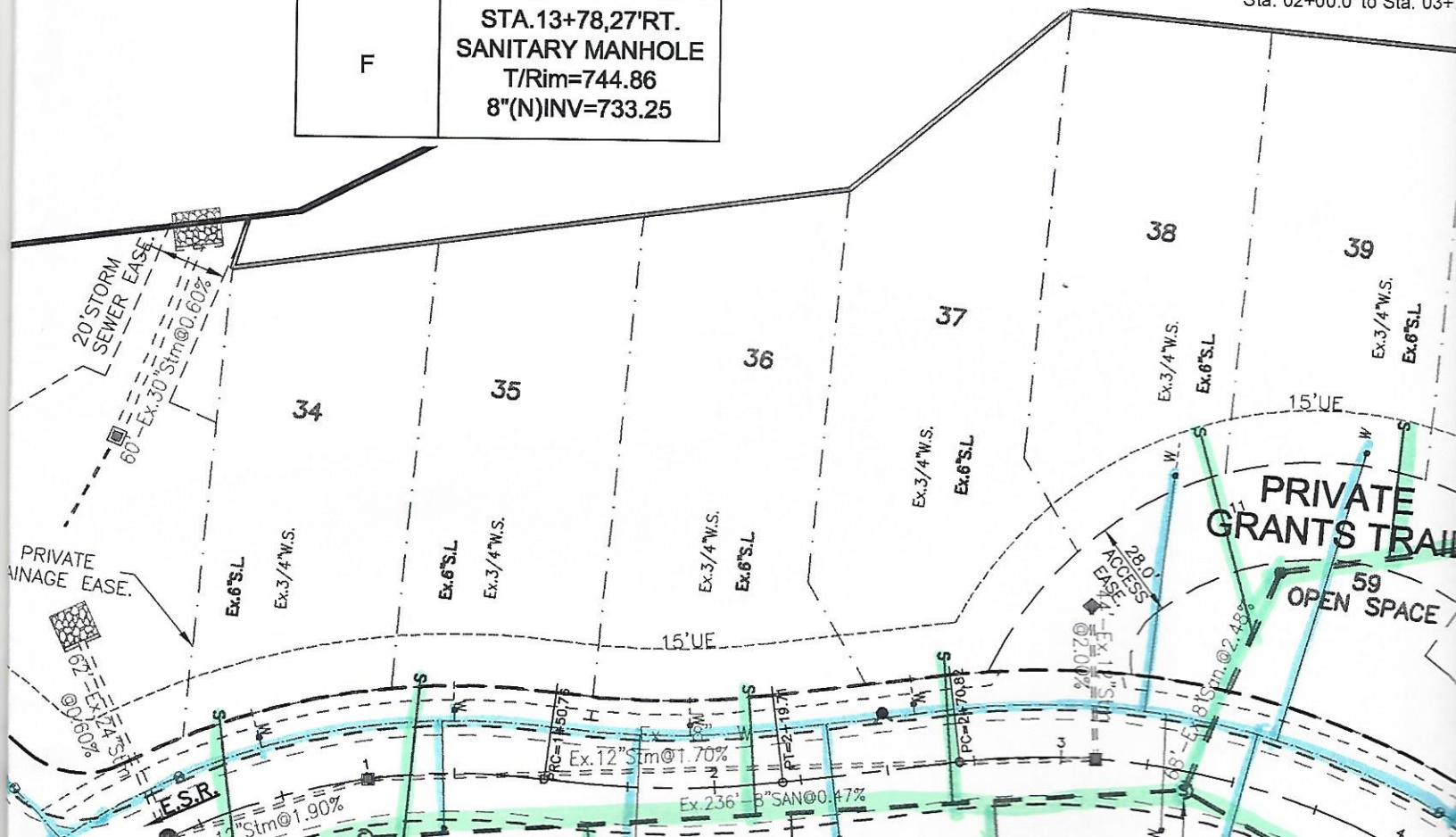

Table
ucture Details
.19+00,18'RT. TARY MANHOLE /Rim=743.91 NW)INV=731.81 (E)INV=731.81
A.9+87,26'RT. TARY MANHOLE /Rim=739.19 W)INV=725.73 SE)INV=725.73 NE)INV=725.73

UTILITY NOTES:

1. LOCATION OF EXISTING UTILITIES TO BE DETERMINED IN THE FIELD PRIOR TO BEGINNING WORK.
2. SANITARY MANHOLES & LATERALS ARE STATIONED FROM THE CENTERLINE OF THE ROAD.
3. EXISTING SANITARY SEWER INVERTS TO BE FIELD VERIFIED PRIOR TO CONSTRUCTION.
4. LOWER WATER SERVICES AS NEEDED TO AVOID CONFLICTS WITH PROPOSED STORM SEWER.
5. THE STATIONS FOR THE 3/4" WATER SERVICES ARE GIVEN TO THE ANGLE VALVE. THE LENGTHS THE 3/4" SERVICES DO NOT INCLUDE 2 FEET OF ADDITIONAL COPPER TO ACCOUNT FOR TURN UP T THE ANGLE VALVE.
6. WATERMAIN SHALL HAVE RESTRAINED JOINTS USED AT LEAST THREE (3) FULL PIPE LENGTHS FR ANY HORIZONTAL/VERTICAL BEND OR TEMPORARY/PERMANENT DEAD END. RESTRAINED JOINTS SHALL BE MEGALUG, FIELD LOC GASKETS, AMERICAN 'LOK-RING' TYPE OR APPROVED EQUAL.
7. AT CROSSINGS, THE WATER MAIN SHALL HAVE A MINIMUM VERTICAL DISTANCE OF TWENTY-FOU (24") INCHES FROM STORM AND SANITARY SEWERS. ALSO, ONE FULL LENGTH OF WATER MAIN SHA BE LOCATED SO THE JOINTS ARE AS FAR FROM THE STORM AND SANITARY SEWERS AS POSSIBLE.
8. CLEAN OUTS SHALL BE INSTALLED ON SUMP MAINS AT THE END OF THE LINE AND ON RUNS LONGER THAN 200'.
9. SUMP MAIN MATERIAL SHALL BE PVC SDR-35, HDPE, OR APPROVED EQUAL.
10. ALL UTILITY TRENCHES SHALL BE COMPACTED TO 98% STANDARD PROCTOR.
11. SEE SHEET C1.0 FOR ADDITIONAL UTILITY NOTES.
12. CONTRACTOR TO LOCATE AND MARK ALL EXISTING TAPS WITH A WITNESS POST.

3' BETWEEN TAPS
10' BETWEEN LAT.
(TYP)

N RESTRAINED
TABLE

.0'
.0'
22.6'
22.0'
34.7'
+78.3'

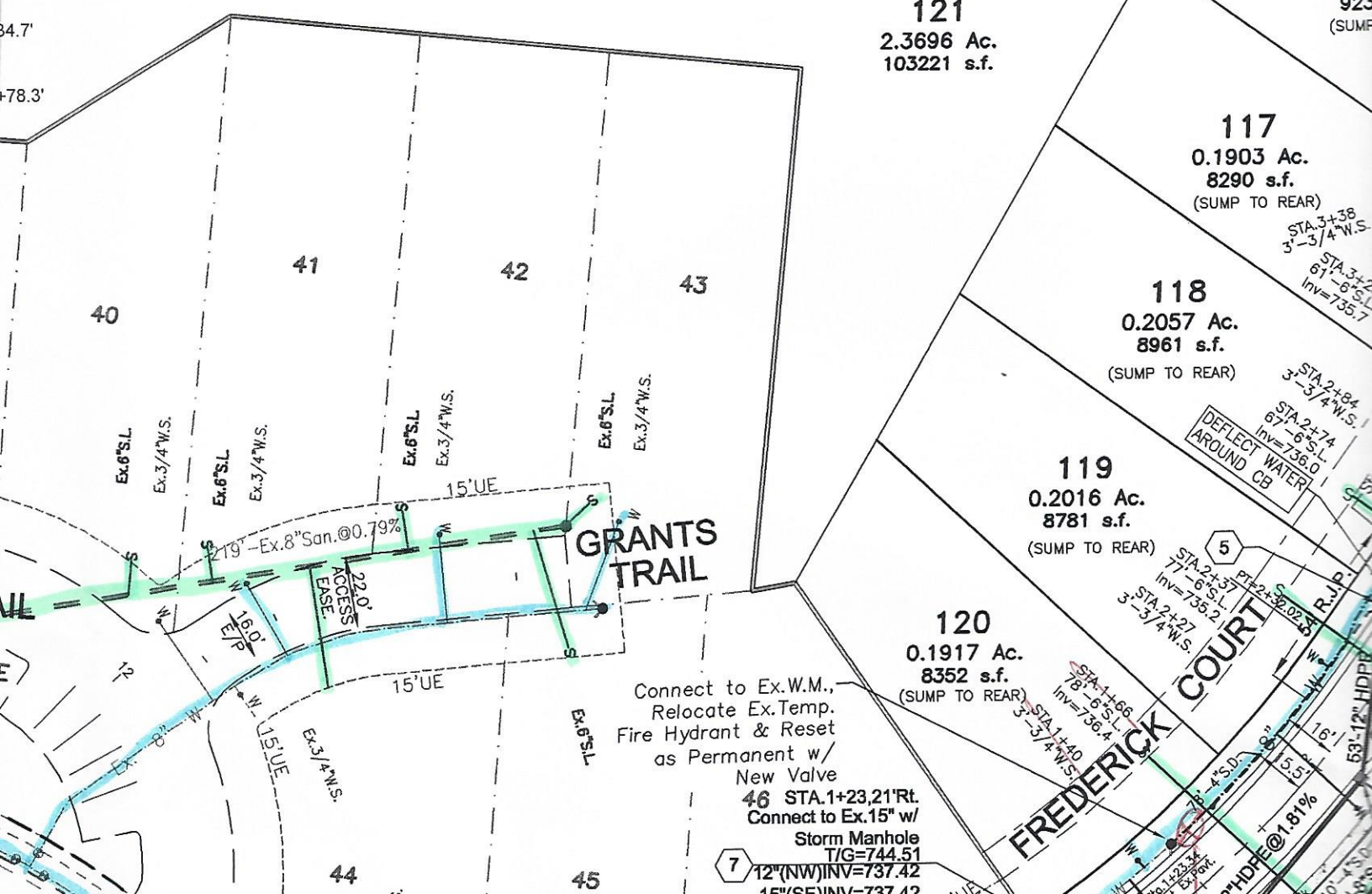

K.

S OF
TO

FROM

UR
HALL
.

LEGEND

U.E.	UTILITY EASEMENT
DR.E.	DRAINAGE EASEMENT
ST.E.	STORM SEWER EASEMENT
S.S.E.	SANITARY SEWER EASEMENT
W.M.E.	WATER MAIN EASEMENT
M.O.E.	MINIMUM OPENING ELEVATION
M.R.O.E.	MINIMUM REAR OPENING ELEVATION
M.F.O.E.	MINIMUM FRONT OPENING ELEVATION
	EXISTING PAVEMENT TO BE REMOVED
	CONCRETE WALK
	TRANSITION FROM V ROAD SECTION PAVEMENT TO CROWNED ROAD SECTION (SEE DETAILS ON SHEET #6.0)

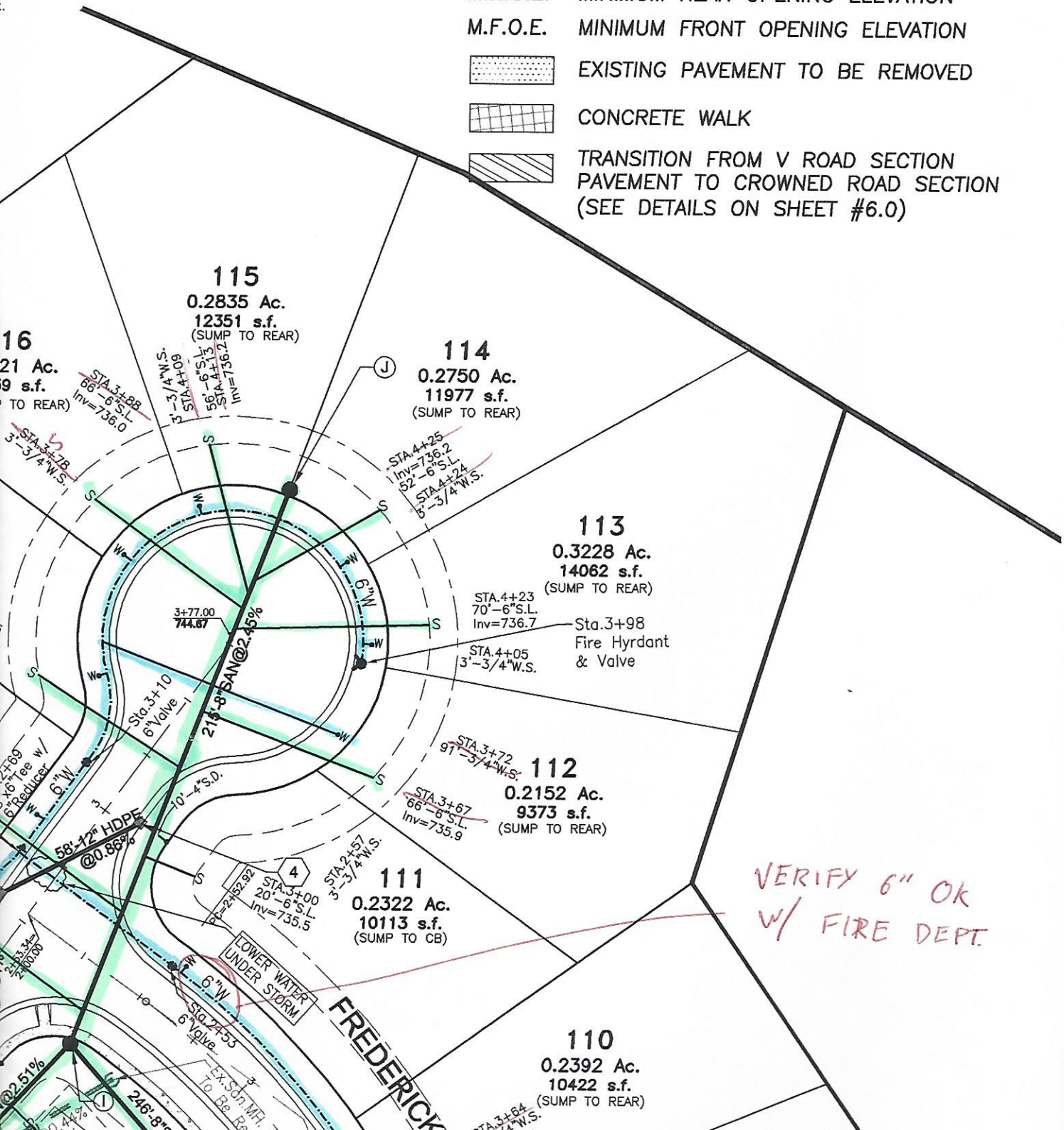

State P
0

Date	Drwn:	Chk:

Revision Description

LOSURE, USE, REPRODUCTION, OR DUPLICATION IN WHOLE, OR IN PART, MAY BE MADE WITHOUT WRITTEN PERMISSION OF BB, AND IS DONE SO AT USER'S SOLE RISK. COPYRIGHT – ALL RIGHTS RESERVED.

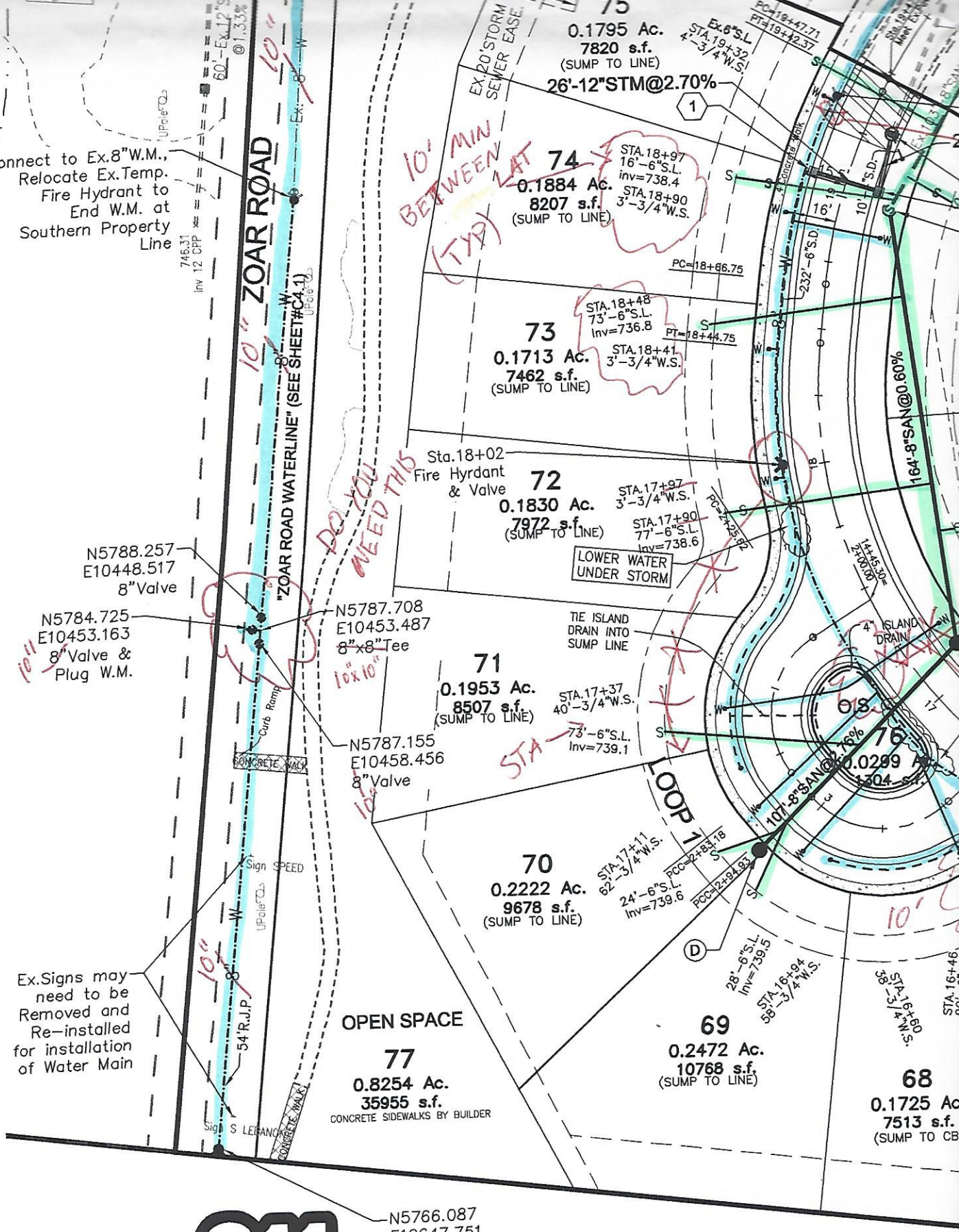
75
0.1795 Ac.
7820 s.f.
(SUMP TO LINE)
26'-12"STM@2.70%
74
0.1884 Ac.
8207 s.f.
(SUMP TO LINE)
STA.18+97
16'-6"S.L.
inv=738.4
STA.18+90
3'-3/4"W.S.
73
0.1713 Ac.
7462 s.f.
(SUMP TO LINE)
STA.18+48
73'-6"S.L.
Inv=736.8
STA.18+41
3'-3/4"W.S.
72
0.1830 Ac.
7972 s.f.
(SUMP TO LINE)
STA.17+97
3'-3/4"W.S.
STA.17+90
77'-6"S.L.
Inv=738.6
LOWER WATER
UNDER STORM
71
0.1953 Ac.
8507 s.f.
(SUMP TO LINE)
STA.17+37
40'-3/4"W.S.
73'-6"S.L.
Inv=739.1
70
0.2222 Ac.
9678 s.f.
(SUMP TO LINE)
STA.17+11
62'-3/4"W.S.
24'-6"S.L.
Inv=739.6
69
0.2472 Ac.
10768 s.f.
(SUMP TO LINE)
68
0.1725 Ac
7513 s.f.
(SUMP TO CB
76
0.0289 Ac
1304 s.f.
OS
OPEN SPACE
77
0.8254 Ac.
35955 s.f.
CONCRETE SIDEWALKS BY BUILDER
ZOAR ROAD
"ZOAR ROAD WATERLINE" (SEE SHEET#C4.1)
Connect to Ex.8"W.M., Relocate Ex.Temp. Fire Hydrant to End W.M. at Southern Property Line
Sta.18+02
Fire Hyrdant
& Valve
N5788.257
E10448.517
8"Valve
N5784.725
E10453.163
8"Valve &
Plug W.M.
N5787.708
E10453.487
8"x8"Tee
N5787.155
E10458.456
8"Valve
N5766.087
E10647.751
Temporary
Fire Hydrant
Ex.Signs may need to be Removed and Re-installed for installation of Water Main
TIE ISLAND
DRAIN INTO
SUMP LINE
4" ISLAND
DRAIN
164'-8"SAN@0.60%
107'-8"SAN@0.16%
LOOP 1
10' MIN BETWEEN LAT (TYP)
DO YOU NEED THIS
STA
10"
10"x10"
Know what's below.
Call before you dig.
GRANT FREDERIC
WATER MAIN BEN
No. | Station & Offset | Bend | No.
1 | Sta.02+13.8,32.4'Rt. | 22.5° | 8
2 | Sta.02+21.7,28.9'Rt. | 11.25° | 9
3 | Sta.02+44.9,16.8'Rt. | 11.25° | 10
Mar 11, 2015 - 9:57am
ne: J:\2011\11C009-003\CV\DWG\11C009-003 CD C3D.dwg - Layout Tab: C4.0 UTILITY PLAN

OPEN SPACE

8"(SW)INV=721.55
8"(SE)INV=731.10
8"(NW)INV=721.55

Ex.12"Stm @2.50%

Ex.ODOT CB2-2B
12"(NW)INV=738.10
12"(SE)INV=738.10

56 55 54 53 52 51

Ex.3/4"W.S. Ex.6"S.L.

Ex.Sanitary Manhole
8"(S)INV=723.01
8"(NE)INV=723.01

12"STM@12.75%

Connect to Ex.W.M., Relocate Ex.Temp. Fire Hydrant & Reset as Permanent w/ Valve at Sta.18+02

LEAVE AS PERMANENT

VALVE

Ex.12"Stm@2.50%

STA.18+88 3/4"W.S.

STA.19+11 9'-6"S.L. inv=738.4

59
0.2240 Ac.
9758 s.f.
(SUMP TO MH)

60
0.2487 Ac.
10833 s.f.
(SUMP TO LINE)

STA.17+57 6'-6"S.L. inv=738.4

STA.17+24 33'-3/4"W.S.

61
0.2374 Ac.
10342 s.f.
(SUMP TO LINE)

62
0.2406 Ac.
10480 s.f.
(SUMP TO LINE)

63
0.2397 Ac.
10440 s.f.
(SUMP TO LINE)

78
0.2397 Ac.
10442 s.f.
(SUMP TO LINE)

79
0.2327 Ac.
10135 s.f.
(SUMP TO CB)

80
0.2191 Ac.
9545 s.f.
(SUMP TO LINE)

LOWER WATER UNDER STORM & DEFLECT AROUND CB

STA.15+65 34'-3/4"W.S.
STA.15+50 8'-6"S.L. Inv=737.8
STA.15+08 33'-3/4"W.S.
STA.14+98 12'-6"S.L. Inv=737.2
STA.14+75 13'-6"S.L. Inv=736.5
STA.14+60 33'-3/4"W.S.
STA.13+91 34'-3/4"W.S.
STA.13+72 13'-6"S.L. Inv=735.9
STA.13+30 33'-3/4"W.S.
STA.13+20 16'-6"S.L. Inv=735.2
STA.12+72 33'-3/4"W.S.
STA.12+62 15'-6"S.L.

89'-8"SAN@0.80%

130'-8"SAN@0.80%

GRANTS FRE

16+69.48= 3+78.22

241'-6"S.D.

366-6"S.D.

Sta.14+22.54 End Pavement Block"A"

Sta.14+25 8"Valve

54'R.J.P.

40'-4"S.D.

10'-4"S.D.

12" HDPE @1.90%

PT=3+52.49

4'Concrete Walk

PC=12+94.4

DEFLECT WATER AROUND CB

STA.16+26 5'-3/4"W.S.
STA.16+05 69'-6"S.L. Inv=738.4
STA.15+59 3'-3/4"W.S.
STA.15+51 72'-6"S.L. Inv=737.7 PC=15+54.58
STA.15+01 3'-3/4"W.S.
STA.14+92 68'-6"S.L. Inv=737.0
STA.14+73 68'-6"S.L. Inv=736.5
STA.14+66 3'-3/4"W.S.
PT=14+22.93
STA.13+88 3'-3/4"W.S.
STA.13+81 67'-6"S.L. Inv=735.8
STA.13+19 3'-3/4"W.S.
STA.13+08 64'-6"S.L. Inv=735.2
STA.12+60 3'-3/4"W.S.
STA.12+48 66'-6"S.L.

67
0.1805 Ac.
7863 s.f.
(SUMP TO LINE)

66
0.1703 Ac.
7416 s.f.
(SUMP TO LINE)

65
0.1755 Ac.
7643 s.f.
(SUMP TO LINE)

64
0.1825 Ac.
7949 s.f.
(SUMP TO LINE)

99
0.1884 Ac.
8206 s.f.
(SUMP TO LINE)

98
0.1887 Ac.
8218 s.f.
(SUMP TO CB)

97
0.1833 Ac.
7984 s.f.
(SUMP TO LINE)

Sta.14+20 Fire Hyrdant & Valve

Sta.13+60 Temp. Fire Hydrant to be Installed w/Block"A" & Reset as Permanent w/ Valve in Block"B"

LOOP 1 CHART

n & Offset	
2+09.0,17.3'Rt.	22.5°
3+21.1,17.5'Rt.	22.5°
3+33.2,16.8'Rt.	11.25°

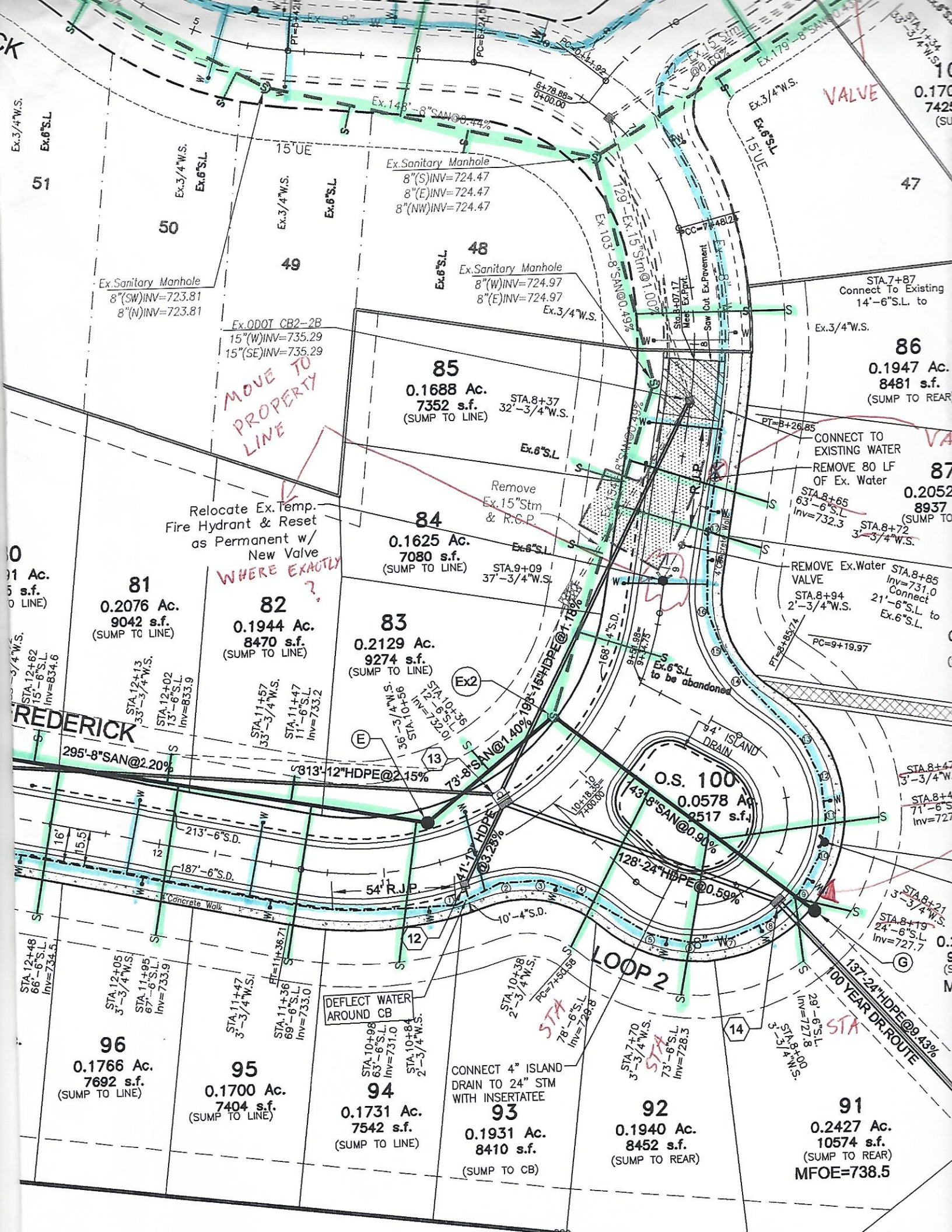
VALVE
Ex.3/4"W.S.
Ex.6"S.L.
15'UE
51
50
49
48
47
Ex.Sanitary Manhole
8"(S)INV=724.47
8"(E)INV=724.47
8"(NW)INV=724.47
Ex.Sanitary Manhole
8"(SW)INV=723.81
8"(N)INV=723.81
Ex.Sanitary Manhole
8"(W)INV=724.97
8"(E)INV=724.97
Ex.ODOT CB2-2B
15"(W)INV=735.29
15"(SE)INV=735.29
MOVE TO PROPERTY LINE
85
0.1688 Ac.
7352 s.f.
(SUMP TO LINE)
STA.8+37
32'-3/4"W.S.
86
0.1947 Ac.
8481 s.f.
(SUMP TO REAR)
STA.7+87
Connect To Existing
14'-6"S.L. to
CONNECT TO
EXISTING WATER
REMOVE 80 LF
OF Ex. Water
STA.8+65
63'-6"S.L.
Inv=732.3
STA.8+72
3'-3/4"W.S.
Remove
Ex.15"Stm
& R.C.P.
Relocate Ex.Temp.
Fire Hydrant & Reset
as Permanent w/
New Valve
WHERE EXACTLY ?
84
0.1625 Ac.
7080 s.f.
(SUMP TO LINE)
STA.9+09
37'-3/4"W.S.
REMOVE Ex.Water
VALVE
STA.8+94
2'-3/4"W.S.
STA.8+85
Inv=731.0
Connect
21'-6"S.L. to
Ex.6"S.L.
81
0.2076 Ac.
9042 s.f.
(SUMP TO LINE)
82
0.1944 Ac.
8470 s.f.
(SUMP TO LINE)
83
0.2129 Ac.
9274 s.f.
(SUMP TO LINE)
Ex.6"S.L.
to be abandoned
94' ISLAND
DRAIN
O.S. 100
0.0578 Ac.
2517 s.f.
295'-8"SAN@2.20%
313'-12"HDPE@2.15%
73'-8"SAN@1.40%
43'-8"SAN@0.90%
128'-24"HDPE@0.59%
41'-12"HDPE
@3.25%
213'-6"S.D.
187'-6"S.D.
54' R.J.P.
Concrete Walk
10'-4"S.D.
LOOP 2
DEFLECT WATER
AROUND CB
CONNECT 4" ISLAND
DRAIN TO 24" STM
WITH INSERTATEE
137'-24"HDPE@9.43%
100 YEAR DR.ROUTE
STA
96
0.1766 Ac.
7692 s.f.
(SUMP TO LINE)
95
0.1700 Ac.
7404 s.f.
(SUMP TO LINE)
94
0.1731 Ac.
7542 s.f.
(SUMP TO LINE)
93
0.1931 Ac.
8410 s.f.
(SUMP TO CB)
92
0.1940 Ac.
8452 s.f.
(SUMP TO REAR)
91
0.2427 Ac.
10574 s.f.
(SUMP TO REAR)
MFOE=738.5

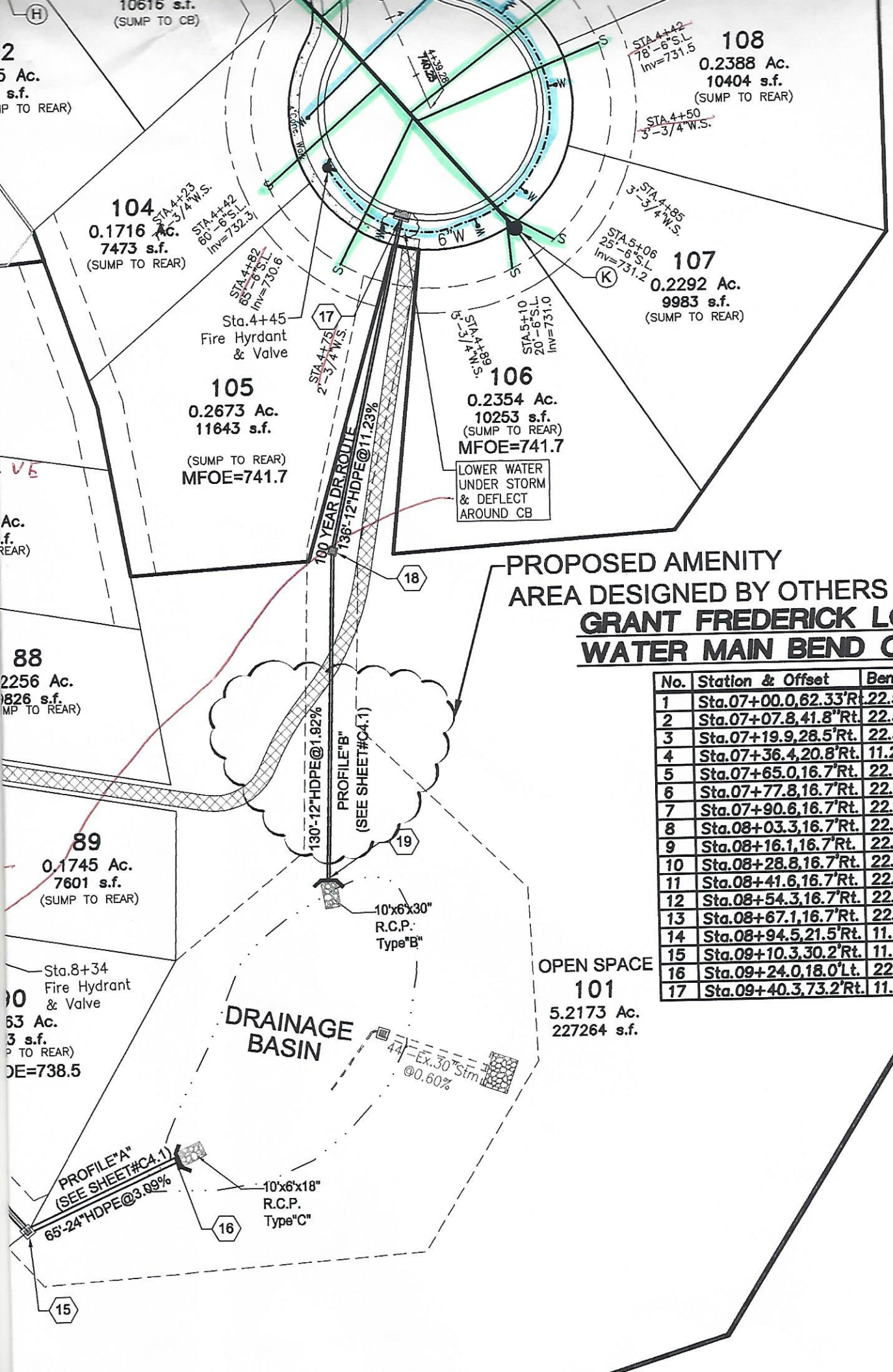

GRANT FREDERICK LOOP 2
WATER MAIN BEND CHART

No.	Station & Offset	Bend
1	Sta.07+00.0,62.33'Rt.	22.5°
2	Sta.07+07.8,41.8"Rt.	22.5°
3	Sta.07+19.9,28.5'Rt.	22.5°
4	Sta.07+36.4,20.8'Rt.	11.25°
5	Sta.07+65.0,16.7'Rt.	22.5°
6	Sta.07+77.8,16.7'Rt.	22.5°
7	Sta.07+90.6,16.7'Rt.	22.5°
8	Sta.08+03.3,16.7'Rt.	22.5°
9	Sta.08+16.1,16.7'Rt.	22.5°
10	Sta.08+28.8,16.7'Rt.	22.5°
11	Sta.08+41.6,16.7'Rt.	22.5°
12	Sta.08+54.3,16.7'Rt.	22.5°
13	Sta.08+67.1,16.7'Rt.	22.5°
14	Sta.08+94.5,21.5'Rt.	11.25°
15	Sta.09+10.3,30.2'Rt.	11.25°
16	Sta.09+24.0,18.0'Lt.	22.5°
17	Sta.09+40.3,73.2'Rt.	11.25°

DOCUMENT AND ALL RELATED DETAIL DRAWINGS, SPECIFICATIONS, AND ELECTRONIC MEDIA PREPARED OR FURNISHED BY BAYER BECKER (BB), ARE INSTRUMENTS OF BB'S PROFESSIONAL SERVICE, AND IS THE EXCLUSIVE

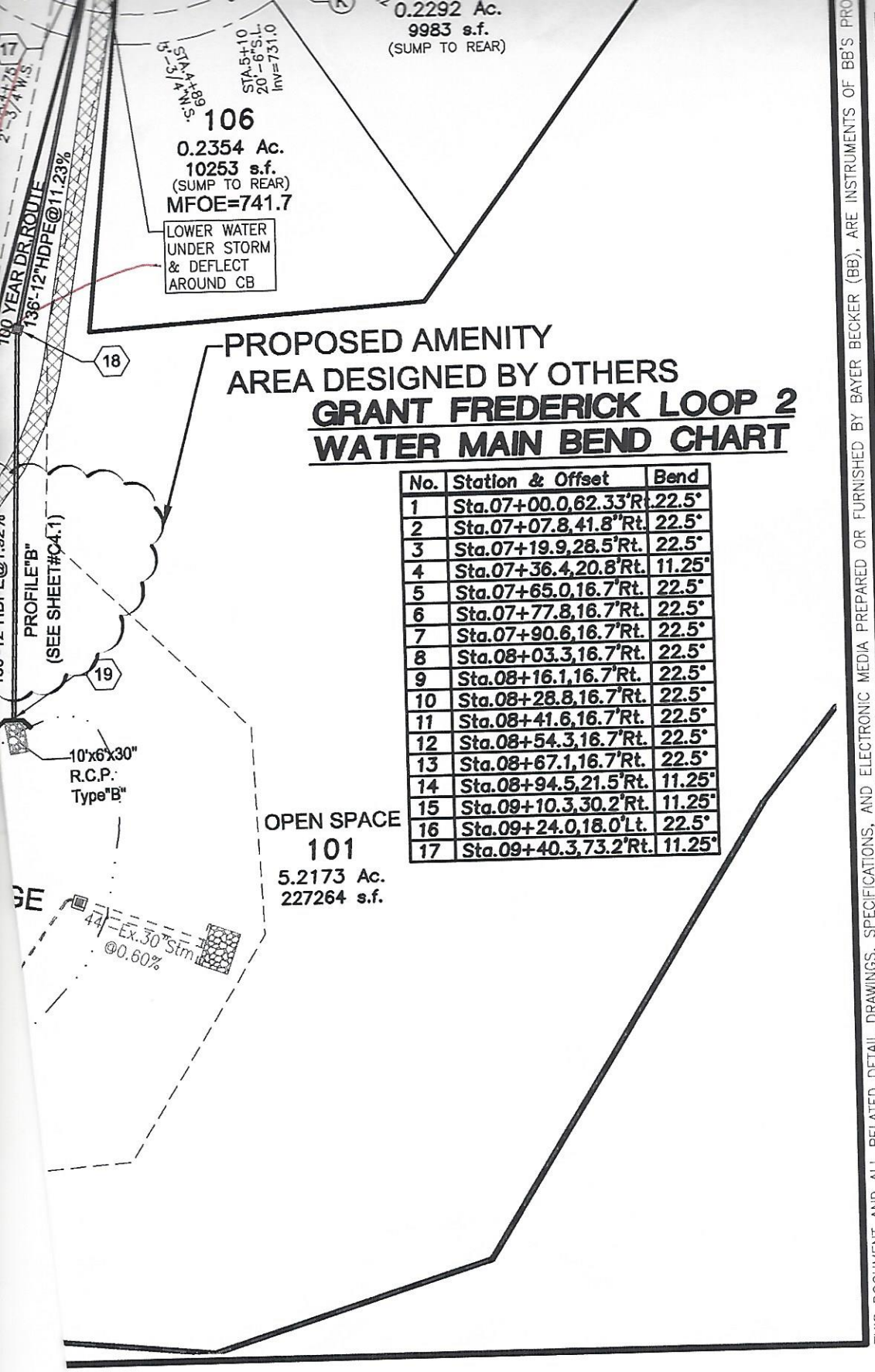

GRANT FREDERICK LOOP 2
WATER MAIN BEND CHART

No.	Station & Offset	Bend
1	Sta.07+00.0,62.33'Rt.	22.5°
2	Sta.07+07.8,41.8"Rt.	22.5°
3	Sta.07+19.9,28.5'Rt.	22.5°
4	Sta.07+36.4,20.8'Rt.	11.25°
5	Sta.07+65.0,16.7'Rt.	22.5°
6	Sta.07+77.8,16.7'Rt.	22.5°
7	Sta.07+90.6,16.7'Rt.	22.5°
8	Sta.08+03.3,16.7'Rt.	22.5°
9	Sta.08+16.1,16.7'Rt.	22.5°
10	Sta.08+28.8,16.7'Rt.	22.5°
11	Sta.08+41.6,16.7'Rt.	22.5°
12	Sta.08+54.3,16.7'Rt.	22.5°
13	Sta.08+67.1,16.7'Rt.	22.5°
14	Sta.08+94.5,21.5'Rt.	11.25°
15	Sta.09+10.3,30.2'Rt.	11.25°
16	Sta.09+24.0,18.0'Lt.	22.5°
17	Sta.09+40.3,73.2'Rt.	11.25°

THIS DOCUMENT AND ALL RELATED DETAIL DRAWINGS, SPECIFICATIONS, AND ELECTRONIC MEDIA PREPARED OR FURNISHED BY BAYER BECKER (BB), ARE INSTRUMENTS OF BB'S PRO

THE VILLAGES AT GRANTS FRE
SECTION TWO, BLO
MILITARY SURVEY
VILLAGE OF SOUTH
WARREN COUN

UTILITY P

bayer becker
www.bayerbecker.com
6900 Tylersville Road, Suite A
Mason, OH 45040 - 513.336.6600

Drawing: 11C009-003 CD C3D
Drawn by: TAC
Checked By: GJK
Issue Date: 03-11-15
Sheet: C4.0

* LABEL ALL FH + VALVES IN PROFILE

FREDERICK COURT

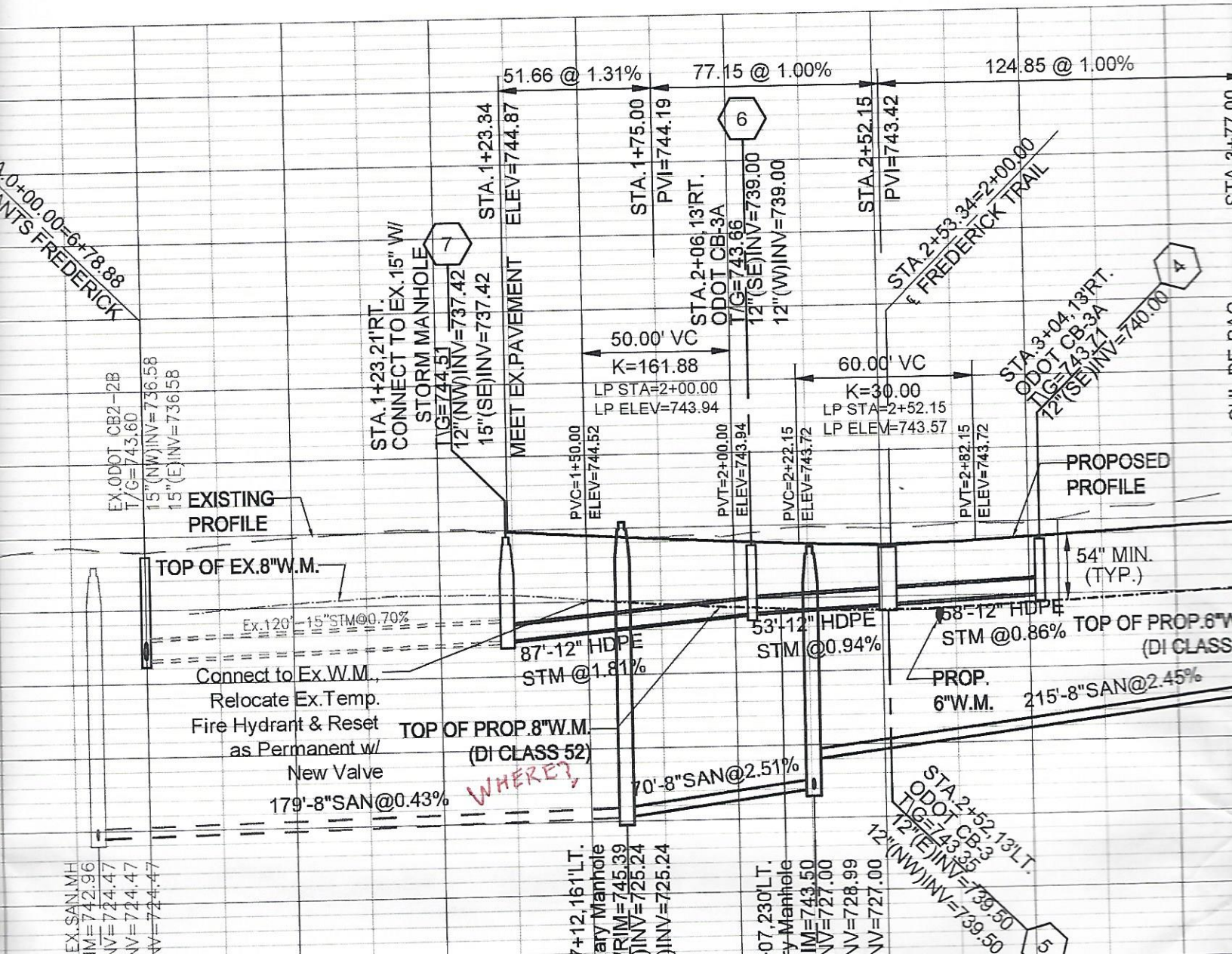

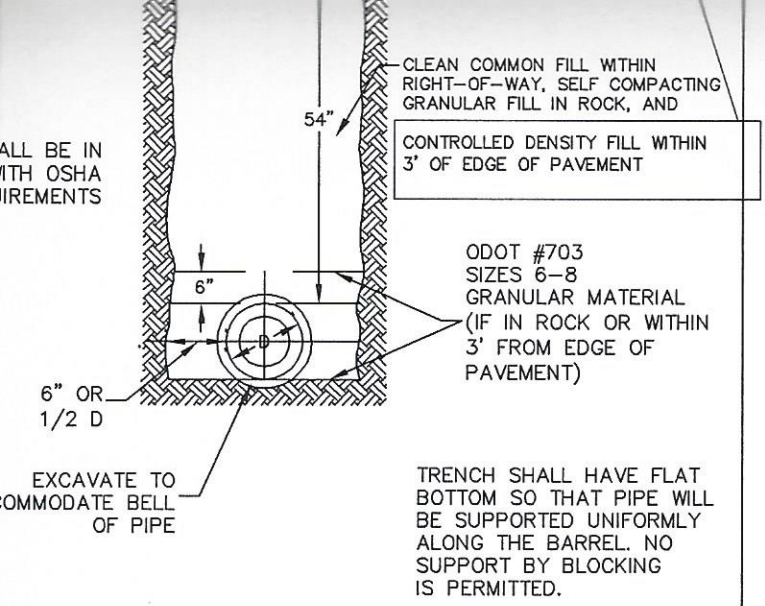

WATERMAIN TRENCH DETAIL

	WARREN COUNTY STANDARD DETAILS DEPARTMENT OF WATER & SEWER	STANDARD NUMBER **W-2**

ADD DETAIL
W-1
CUL-DE-SAC

VE	CHART B CHECK VALVE	CHART C METER BOX & COVER	CHART D CORP STOP	CHART E COUPLINGS
258-1 332W 2 B-22	MUELLER P 14269 FORD HA34 323 McDONALD 02-342	METER PIT FRATCO 40203000 (20" x 30") OR EQUAL COVER FORD C-3T OR EQUAL	MUELLER P 15008 FORD F-1000 McDONALD MAC-PAK COMPRESSION	FORD C44-33 MUELLER P 15403 McDONALD 4758-22
44W	FORD HA34-444	METER PIT FRATCO 40203000 (20" x 30") OR EQUAL COVER FORD C-3T OR EQUAL	FORD F-1000	FORD C44-44 MUELLER P 15403 McDONALD 4758-22
-42W	FORD HA34-323	METER PIT FRATCO 40203000 (20" x 30") OR EQUAL COVER FORD C-3T OR EQUAL	FORD F-1000	FORD C44-33 MUELLER P 15403 McDONALD 4758-22

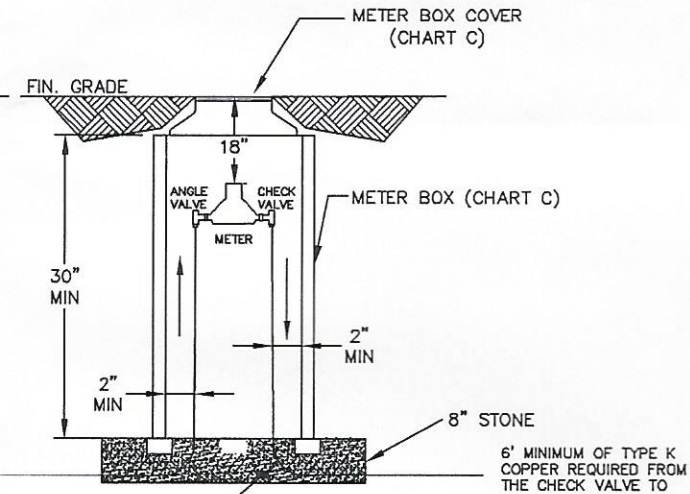

ON STOP

ON SERVICE SIDE OF PIT – TYPE K COPPER 3/4"AND 1" OR POLYETHYLENE 200 PSI (ASTM D 2737) 1 1/2" AND 2" SDR 21 (SLIP JOINT) (ASTM-2241) 1" AND LARGER TRACER WIRE MUST BE USED WITH POLY AND SDR 21.

PREVENTER TO BE INSTALLED AHEAD OF ANY SPRINKLER
METER PIT

Item	Revision Description	Date	Drwn:	Chk:

RIVERS BEND
EDERICK
OCKS A, B & C
Y No. 1546
TH LEBANON,
ITY, OHIO
WATER DETAILS

'S PROFESSIONAL SERVICE, AND IS THE EXCLUSIVE PROPERTY OF BB. NO DISCLOSURE, USE, REPRODUCTION, OR DUPLICATION IN WHOLE, OR IN PART, MAY BE MADE WITHOUT WRITTEN PERMISSION OF BB, AND IS DON